DOCUMENT CHANGE NOTICE

Zilog

DATE: 01-03-79

DCN NUMBER: E3-3006-01, Rev. C

PUBLICATION NUMBER: 03-3006-01, Rev. B

TITLE: Z80-MDC (MDC/E) Hardware User's Manual

PREVIOUS DCN's, BY NUMBER: E3-3006-01, Rev. B

EFFECTIVE DATE: 01-03-79

This Document Change Notice provides change pages for the publication specified above. Please note that the change pages provided with this DCN supersede and obsolete the changes set down in the previous DCN (E3-3006-01, Rev. B). These change pages will remain in effect for subsequent releases unless specifically amended by another DCN or superseded by a publication revision. The following pages are to be treated as described below:

Replace pages 17-32
Replace pages 35-36

Changes to text are indicated by a vertical line in the right margin, opposite the changed text portion.

NOTE: Please file this DCN at the back of the manual to provide a record of changes.

The following table shows the standard programming of A3 for use with 4K RAMs.

	0	1	2	3	4	5	6	7	8	9	A	B	C	D	E	F
00	1F	1F	1F	1F	1F	1F	1F	1F	1F	1F	1F	1F	1F	1F	1F	1F
10	FF	FF	CF	AF	6F	FF	FF	FF	FF	FF	FF	FF	FF	FF	FF	FF

This programming places the RAMs in the address space 2000H to 4FFFH.

4.3 Programming for 16K RAMs

Wiring for the 16K jumper plug is listed below:

FROM	J1-13	TO	J1-15	(AB0)
	J1-1		J1-14	(AB12)
	J1-11		J1-16	(AB6)
	J1-2		J1-12	(AB13)

The table below shows the standard programming of A3 for use with 16K RAMs.

	0	1	2	3	4	5	6	7	8	9	A	B	C	D	E	F
00	1F	1F	1F	1F	1F	1F	1F	1F	1F	1F	1F	1F	1F	1F	1F	1F
10	FF	CF	CF	CF	FF	FF	FF	FF	CF	AF	AF	AF	AF	6F	6F	6F

This programming places the MDC RAM in the memory spaces 1000 to 4000H and 8000H to FFFFH.

5.0 SCHEMATICS (MDC)

CONFIDENTIAL
This document is the property of Zilog Incorporated and contains information which is confidential and proprietary to Zilog. No part of this document may be copied, reproduced or disclosed to third parties without the prior written consent of Zilog Incorporated.

REVISIONS			
LTR	DESCRIPTION	DATE	APPROVED
A	RELEASE ECN 00172	12-16-77	JRB 12-16-77
B	ECN 00305	4-5-78	JRB 4-6-78
C	ECN 00358	5-18-78	
C1	RECORD CHANGE-ECR 527	6-6-78	
C2	RECORD CHANGE-ECN 456	7-31-78	
D	ECN # 00591	11.6.78	

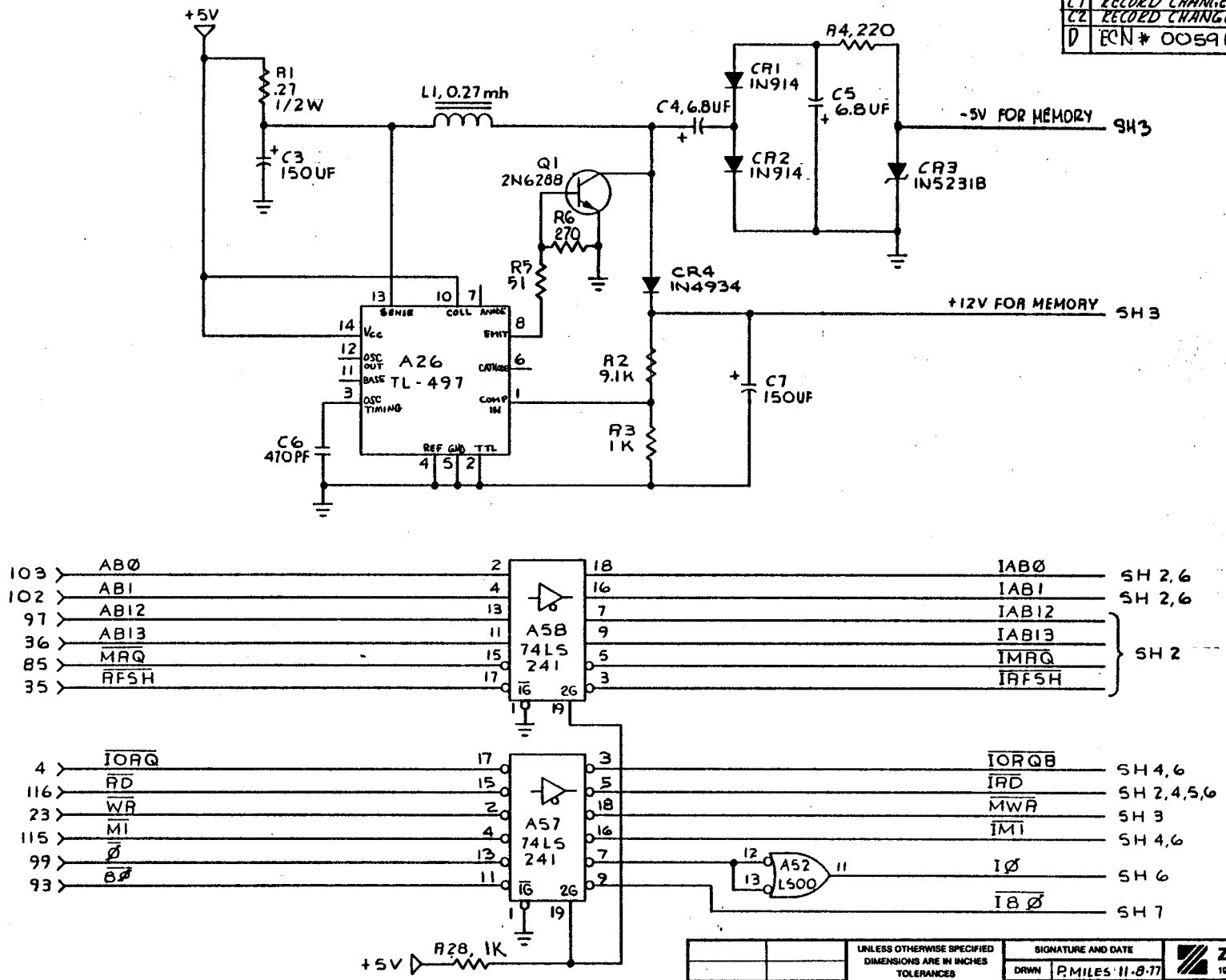

NEXT ASSY	USED ON	UNLESS OTHERWISE SPECIFIED DIMENSIONS ARE IN INCHES TOLERANCES ANGLES ± 1° FRACTIONS ± 1/64 3 PLACE DEC ± .010 2 PLC DEC ± .02	SIGNATURE AND DATE
APPLICATION		MAT'L:	FINISH

DRWN R MILES 11-8-77
DRFTG CHK 12-16-77
APVD 12-16-77

ZILOG INC.
10460 BUBB ROAD, CUPERTINO, CALIFORNIA 95014

TITLE LOGIC DIAGRAM MDC2

SIZE C | DRAWING NO. DZ-0015-04 | ISSUE D

SCALE NONE | SHEET 1 OF 8

CONFIDENTIAL
This document is the property of Zilog Incorporated and contains information which is confidential and proprietary to Zilog. No part of this document may be copied, reproduced or disclosed to third parties without the prior written consent of Zilog Incorporated.

REVISIONS			
LTR	DESCRIPTION	DATE	APPROVED
D	SEE SHT. 1	11.6.78	RDD WKB

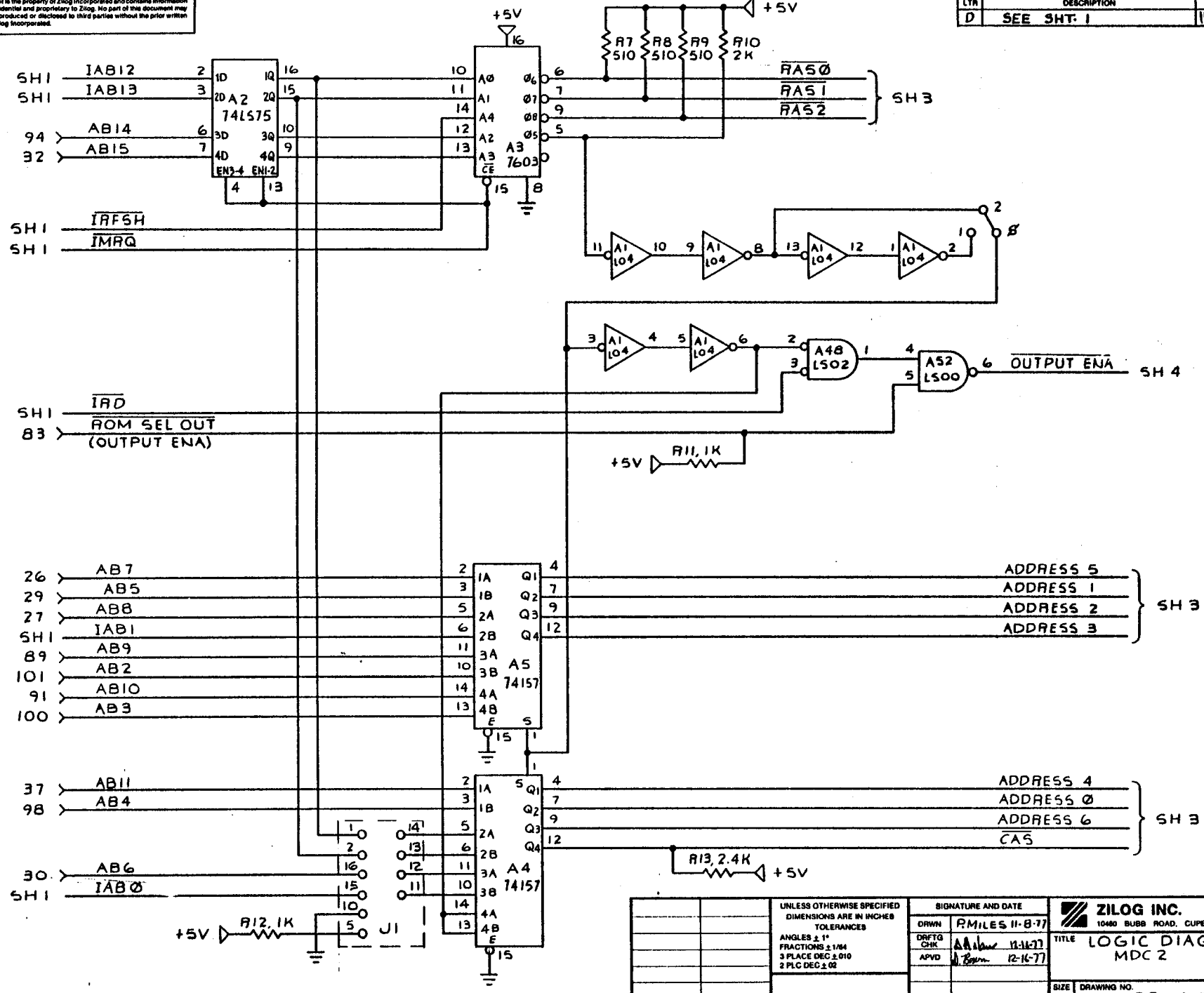

UNLESS OTHERWISE SPECIFIED DIMENSIONS ARE IN INCHES TOLERANCES ANGLES ± 1° FRACTIONS ± 1/64 3 PLACE DEC ± .010 2 PLC DEC ± .02	SIGNATURE AND DATE	ZILOG INC. 10460 BUBB ROAD, CUPERTINO, CALIFORNIA 95014	
	DRWN P.MILES 11-8-77	TITLE LOGIC DIAGRAM MDC 2	
	DRFTG CHK 12-16-77		
	APVD 12-16-77		
NEXT ASSY / USED ON	MAT'L:	FINISH	SIZE C / DRAWING NO. DZ-0015-04 / ISSUE D
APPLICATION			SCALE — / SHEET 2 OF 8

IDENTIAL
This document is the property of Zilog Incorporated and contains information which is confidential and proprietary to Zilog. No part of this document may be copied, reproduced or disclosed to third parties without the prior written consent of Zilog Incorporated.

REVISIONS			
LTR	DESCRIPTION	DATE	APPROVED
D	SEE SHT. 1	11.6.78	

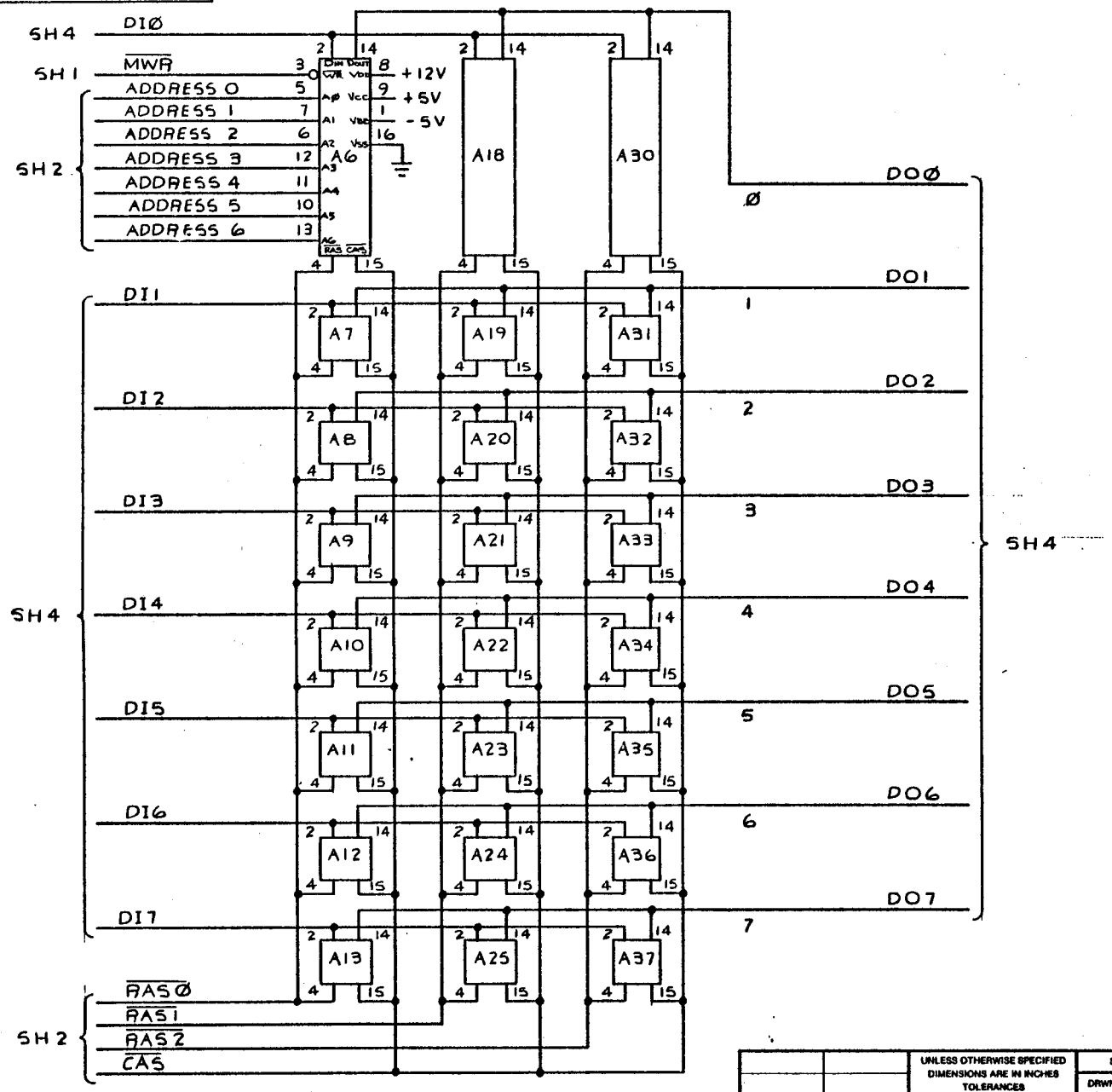

NOTES:

1. ALL DEVICES ARE WIRED TYP. TO A6.

UNLESS OTHERWISE SPECIFIED DIMENSIONS ARE IN INCHES TOLERANCES ANGLES ± 1° FRACTIONS ± 1/64 3 PLACE DEC ± .010 2 PLC DEC ± .02	SIGNATURE AND DATE	ZILOG INC. 10460 BUBB ROAD, CUPERTINO, CALIFORNIA 95014	
	DRWN P. MILES 11-8-77	TITLE LOGIC DIAGRAM MDC 7	
	DRFTG CHK 12-16-77		
	APVD 12-16-77		
NEXT ASSY / USED ON	MAT'L:	FINISH	SIZE C / DRAWING NO. DZ-0015-04 / ISSUE D
APPLICATION			SCALE / SHEET 3 OF 8

CONFIDENTIAL
This document is the property of Zilog Incorporated and contains information which is confidential and proprietary to Zilog. No part of this document may be copied, reproduced or disclosed to third parties without the prior written consent of Zilog Incorporated.

REVISIONS			
LTR	DESCRIPTION	DATE	APPROVED
D	SEE SHT.	11.6.78	RDD ARB

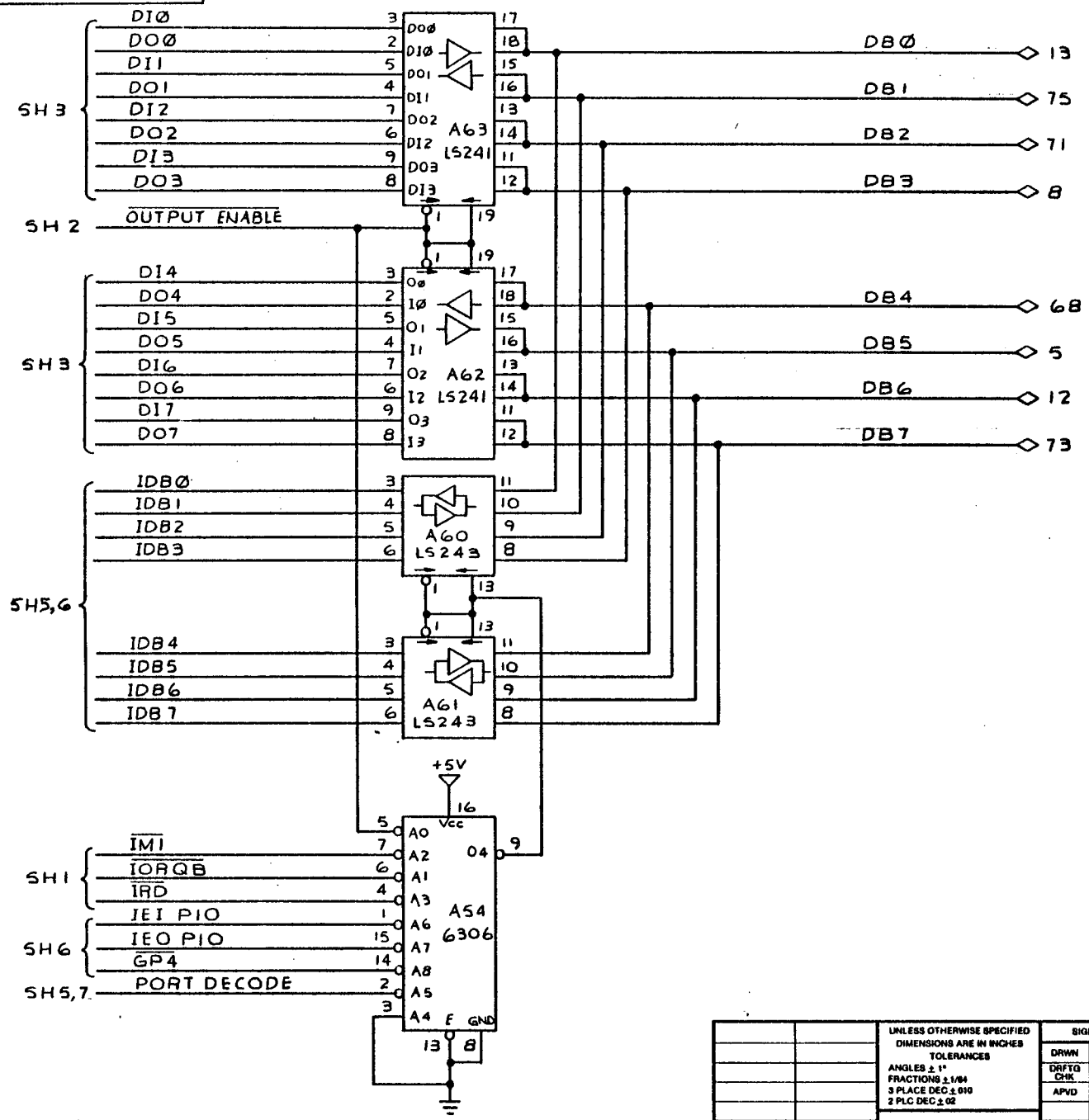

		UNLESS OTHERWISE SPECIFIED DIMENSIONS ARE IN INCHES TOLERANCES ANGLES ± 1° FRACTIONS ± 1/64 3 PLACE DEC ± .010 2 PLACE DEC ± .02	SIGNATURE AND DATE	ZILOG INC. 10460 BUBB ROAD, CUPERTINO, CALIFORNIA 95014
			DRWN P. MILES	TITLE LOGIC DIAGRAM MDC 2
			DRFTG CHK 12-16-77	
			APVD 12-16-77	
NEXT ASSY	USED ON	MAT'L:	FINISH	SIZE C DRAWING NO. DZ-0015-04 ISSUE D
APPLICATION				SCALE — SHEET 4 OF 8

CONFIDENTIAL
This document is the property of Zilog Incorporated and contains information which is confidential and proprietary to Zilog. No part of this document may be copied, reproduced or disclosed to third parties without the prior written consent of Zilog Incorporated.

REVISIONS			
LTR	DESCRIPTION	DATE	APPROVED
D	SEE SHT 1	11.6.78	RCD

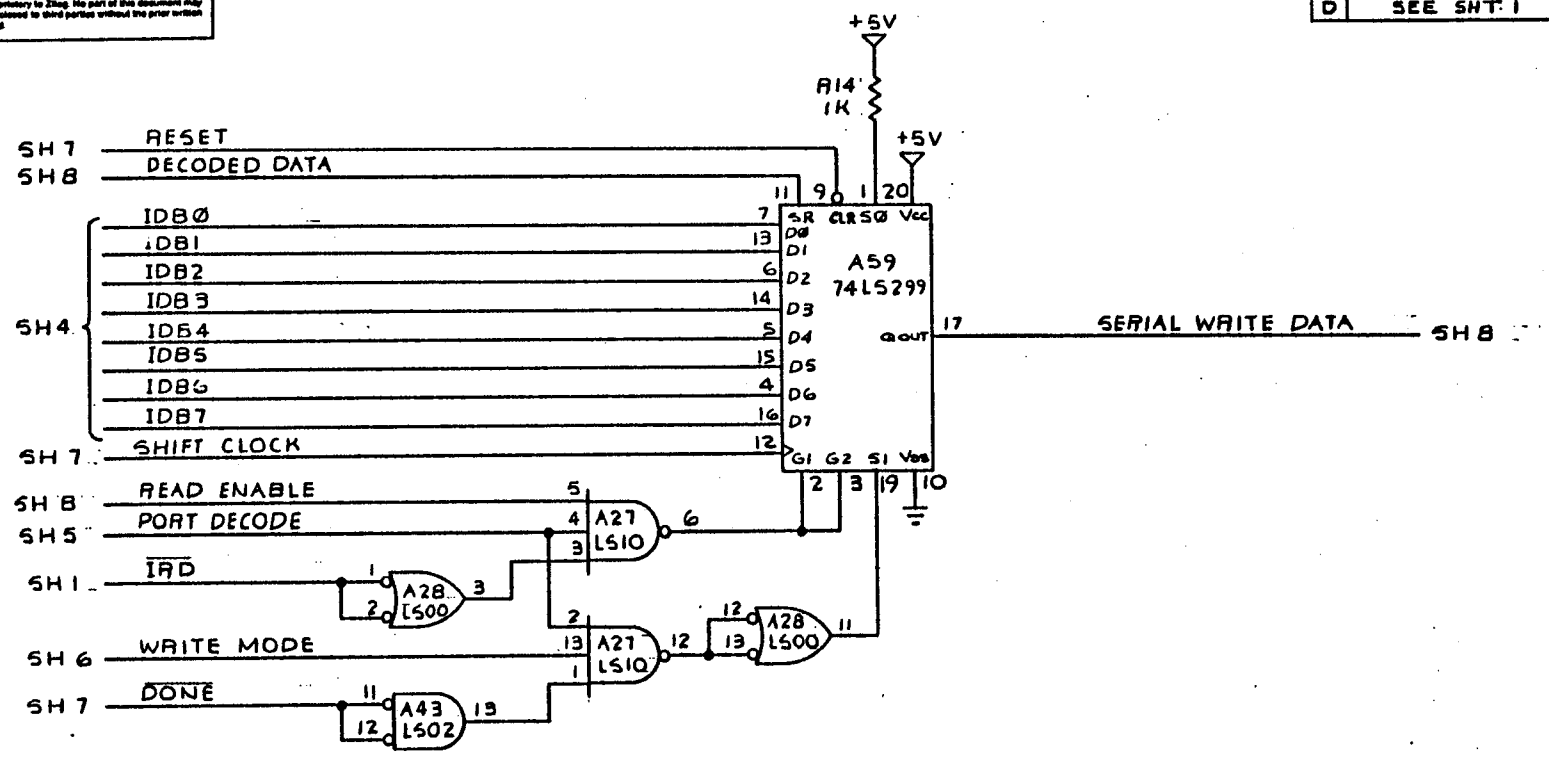

DISK DATA PORT: CF16

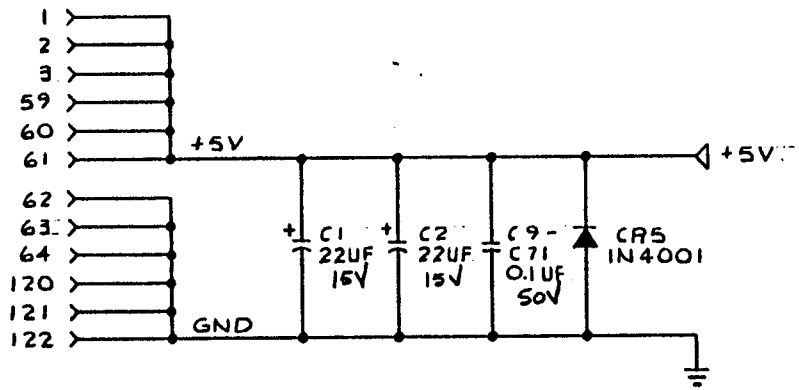

UNLESS OTHERWISE SPECIFIED DIMENSIONS ARE IN INCHES TOLERANCES ANGLES ± 1° FRACTIONS ± 1/64 3 PLACE DEC ± .010 2 PLC DEC ± .02	SIGNATURE AND DATE	ZILOG INC. 10460 BUBB ROAD, CUPERTINO, CALIFORNIA 95014	
	DRWN P MILES	TITLE LOGIC DIAGRAM MDC 2	
	DRFTG CHK 12-11-77		
	APVD 12-16-77		
NEXT ASSY / USED ON	MAT'L: / FINISH	SIZE C / DRAWING NO. DZ-0015-04	ISSUE D
APPLICATION		SCALE	SHEET 5 OF 8

CONFIDENTIAL
This document is the property of Zilog Incorporated and contains information which is confidential and proprietary to Zilog. No part of this document may be copied, reproduced or disclosed to third parties without the prior written consent of Zilog Incorporated

REVISIONS			
LTR	DESCRIPTION	DATE	APPROVED
D	SEE SHT. 1	11.6.78	RDD

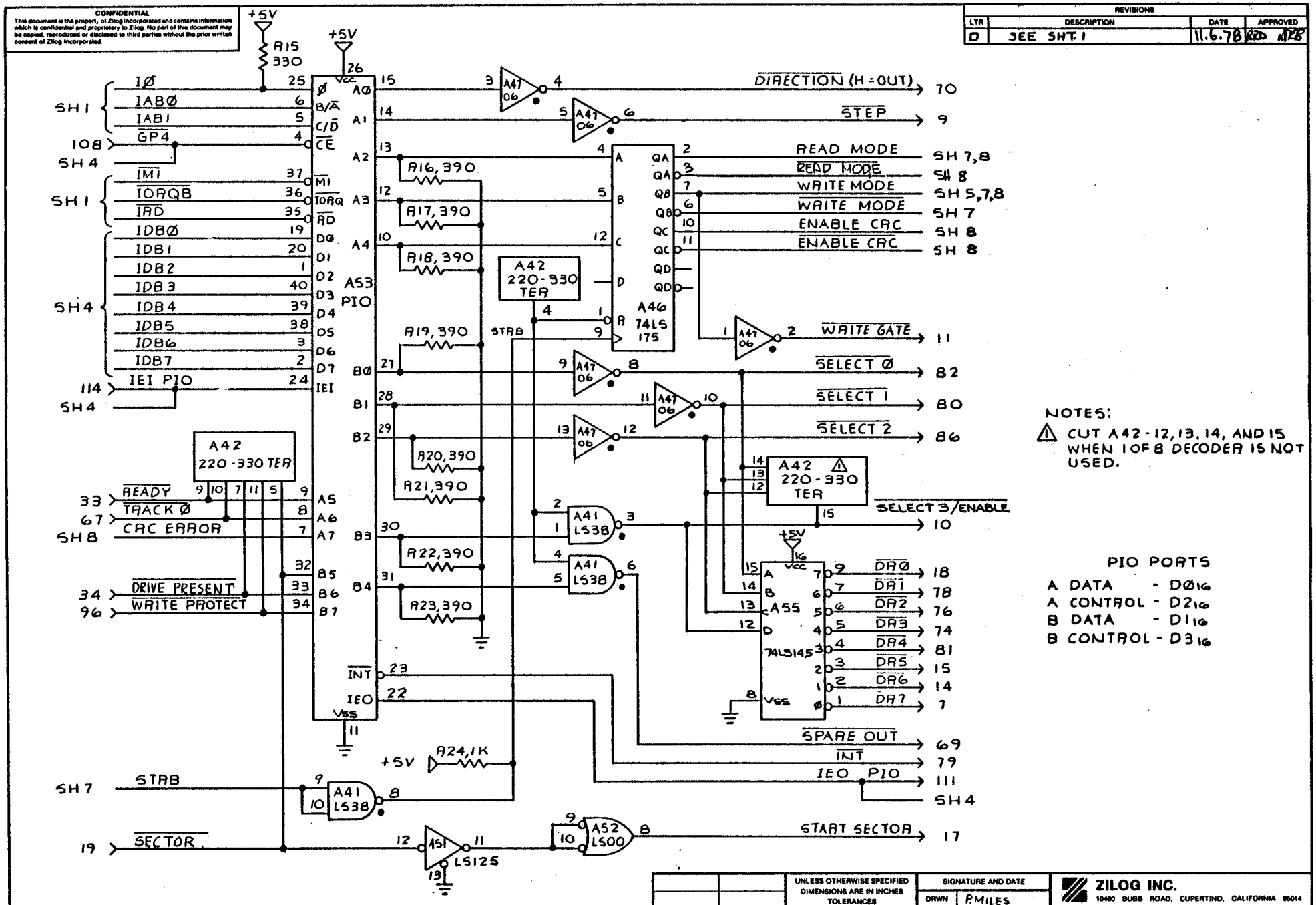

NOTES:

⚠1 CUT A42-12, 13, 14, AND 15 WHEN 1 OF 8 DECODER IS NOT USED.

PIO PORTS

A DATA - $D0_{16}$
A CONTROL - $D2_{16}$
B DATA - $D1_{16}$
B CONTROL - $D3_{16}$

NEXT ASSY	USED ON	UNLESS OTHERWISE SPECIFIED DIMENSIONS ARE IN INCHES TOLERANCES ANGLES ± 1° FRACTIONS ± 1/64 3 PLACE DEC ± .010 2 PLC DEC ± .02	SIGNATURE AND DATE	ZILOG INC. 10460 BUBB ROAD, CUPERTINO, CALIFORNIA 95014
APPLICATION		MAT'L:	DRWN P. MILES	TITLE LOGIC DIAGRAM MDC 2
			DRFTG CHK 12-16-77	
			APVD 12-16-77	
			FINISH	SIZE C DRAWING NO. DZ-0015-04 ISSUE D
				SCALE SHEET 6 OF 8

IDENTIAL
This document is the property of Zilog Incorporated and contains information which is confidential and proprietary to Zilog. No part of this document may be copied, reproduced or disclosed to third parties without the prior written consent of Zilog Incorporated.

REVISIONS			
LTR	DESCRIPTION	DATE	APPROVED
D	SEE SHT. 1	11.6.78	RPD

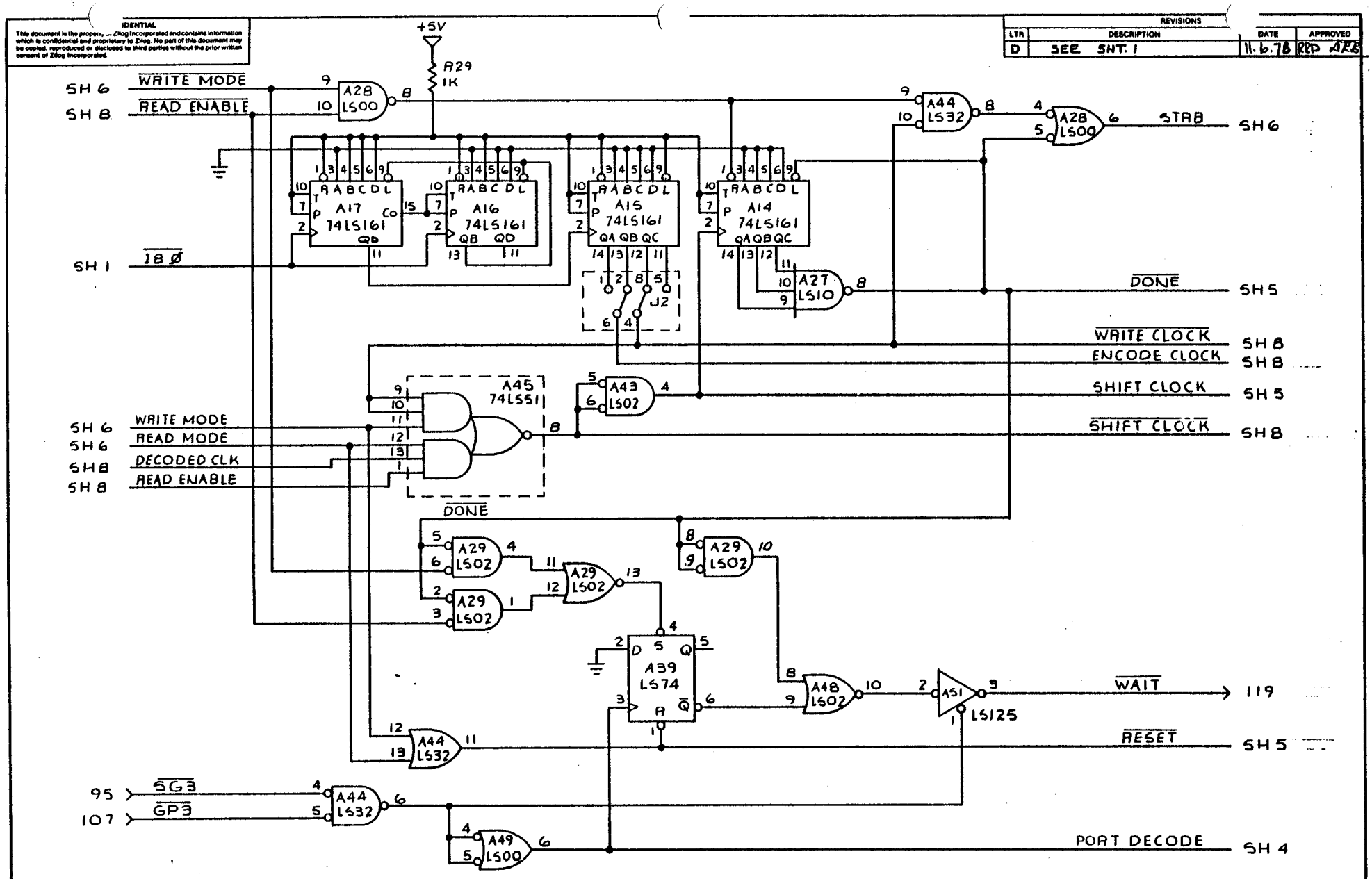

8 Ø = 19.6608 MHZ	
DATA RATE = 517.3 KBS	1-6,2-4
DATA RATE = 258.7 KBS	2-6,8-4
DATA RATE = 129.3 KBS	8-6,5-4

NOTE: FOR RATES OTHER THAN 258.7 KBS THE A C OF THE DATA SEPARATOR (SHT 8) MUST BE CHANGED

NEXT ASSY	USED ON	APPLICATION	

UNLESS OTHERWISE SPECIFIED DIMENSIONS ARE IN INCHES
TOLERANCES
ANGLES ± 1°
FRACTIONS ± 1/64
3 PLACE DEC ± .010
2 PLC DEC ± .02

MAT'L:

SIGNATURE AND DATE

DRWN	P. MILES	
DRFTG CHK		12-16-77
APVD		12-16-77

FINISH

ZILOG INC.
10460 BUBB ROAD, CUPERTINO, CALIFORNIA 95014

TITLE LOGIC DIAGRAM MDC2

SIZE C | DRAWING NO. DZ-0015-04 | ISSUE D

SCALE ——— | SHEET 7 OF 8

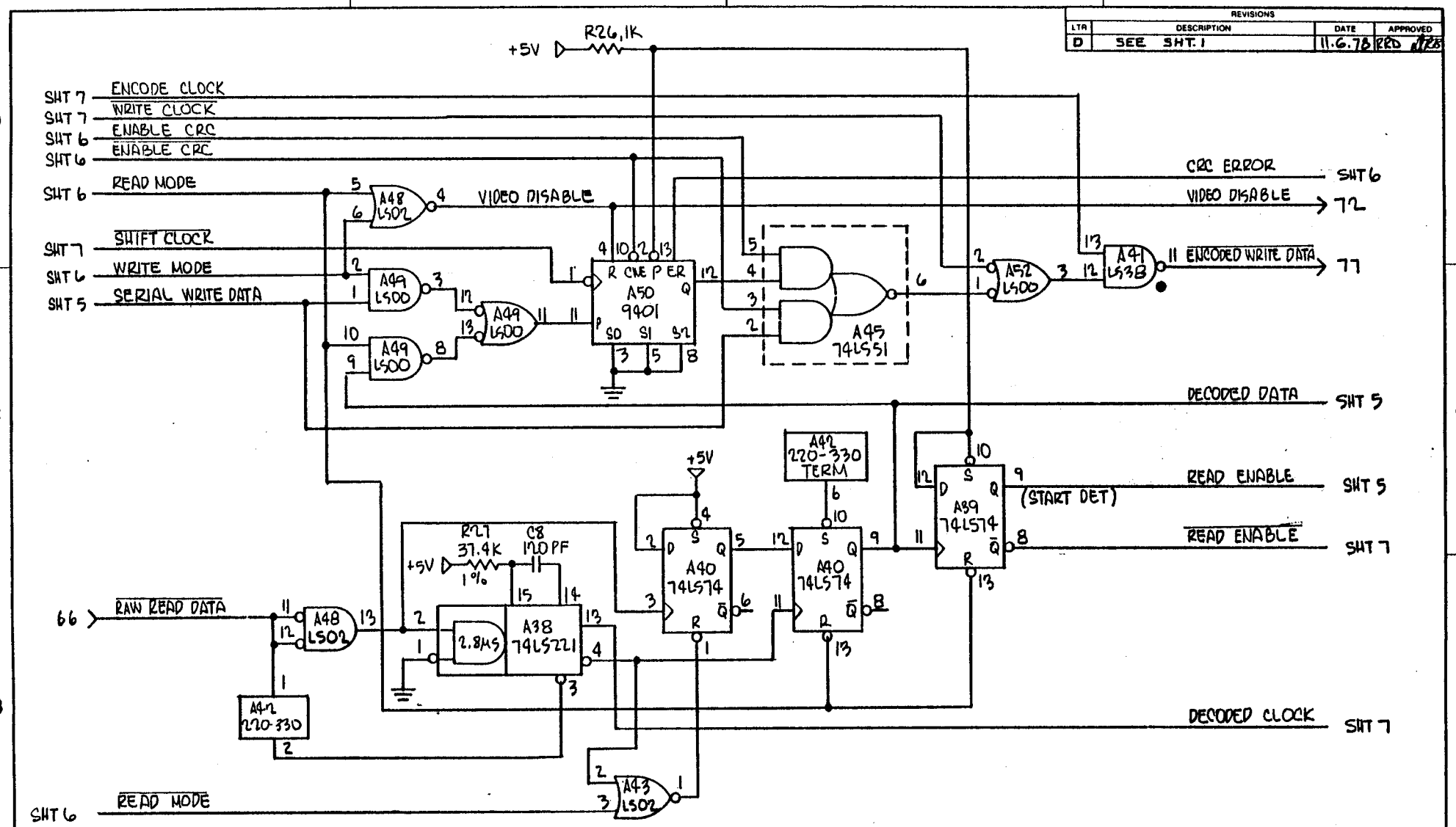

REVISIONS			
LTR	DESCRIPTION	DATE	APPROVED
D	SEE SHT. 1	11.6.78	RRD

ITEM	QTY.	TYPE	ZILOG PART NO.	DESCRIPTION	REF. DES

PARTS LIST

UNLESS OTHERWISE SPECIFIED DIMENSIONS ARE IN INCHES TOLERANCES
ANGLES ± 1°
FRACTIONS ± 1/64
3 PLACE DEC ± .010
2 PLC DEC ± .02

SIGNATURE AND DATE
DRWN BM 10-10-78
DRFTG CHK
APVD 11-9-78

CODE IDENT: 56708

MAT'L:

FINISH

NEXT ASSY | USED ON
APPLICATION

ZILOG INC.
10411 BUBB ROAD, CUPERTINO, CALIFORNIA 95014

TITLE LOGIC DIAGRAM, MDC 2

SIZE C | DRAWING NO DZ-0015-04 | ISSUE D

SCALE --- | SHEET 8 OF 8

CONFIDENTIAL
This document is the property of Zilog Incorporated and contains information which is confidential and proprietary to Zilog. No part of this document may be copied, reproduced or disclosed to third parties without the prior written consent of Zilog Incorporated.

24

5.0 SCHEMATICS (MDC/E)

CONFIDENTIAL
This document is the property of Zilog, Inc. and shall not be reproduced, copied or communicated to any person without written permission of Zilog, Inc.

REVISIONS			
LTR	DESCRIPTION	DATE	APPROVED
A	ECN 00279	3-78	A
B	ECN 00475	9-18-78	DWL

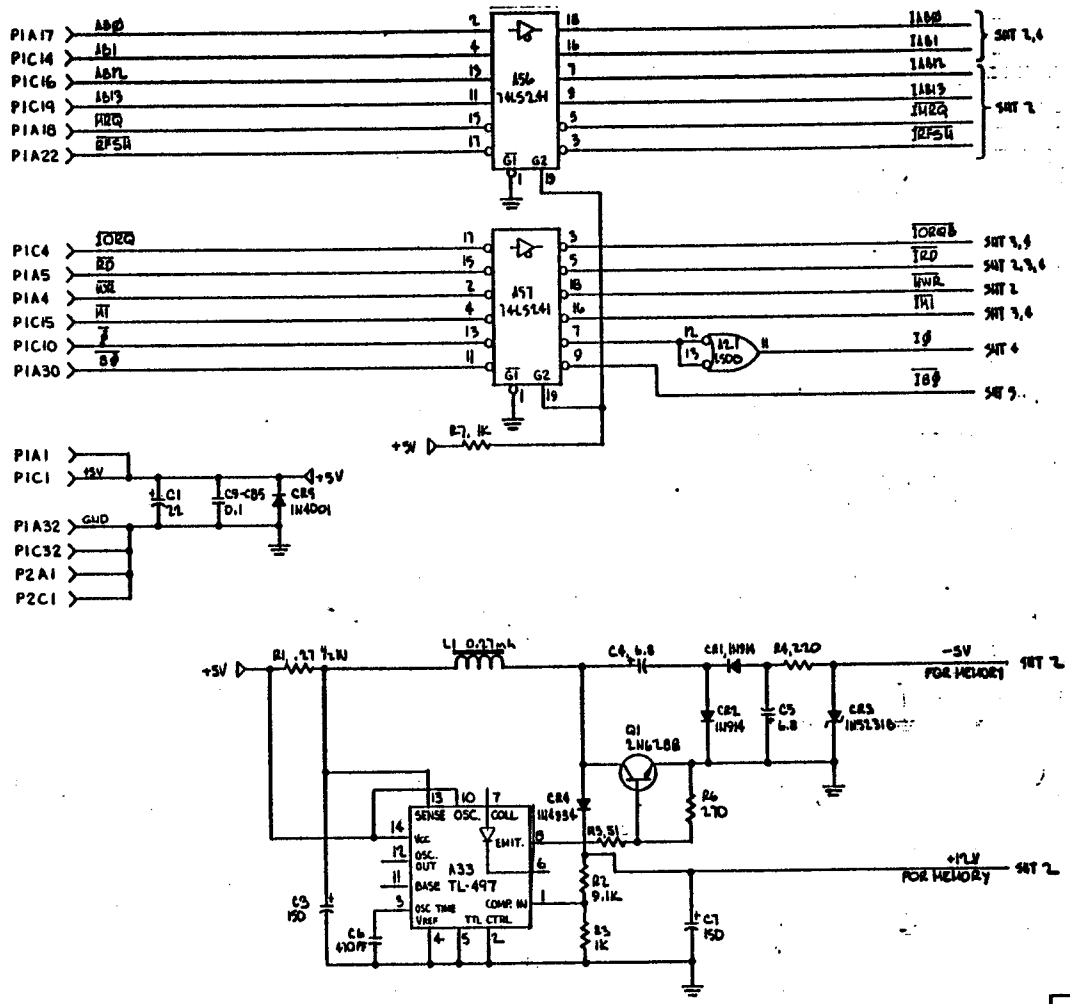

NOTES:

1. UNLESS OTHER SPECIFIED:
   RESISTORS ARE CARBON, ¼W, 5%,
   CAPACITORS ARE IN MICROFARADS.

2. A10-A16, A25-A32, A40-A47 TO BE WIRED TYP TO A9.

3. PIO PORTS
   - A DATA - $D0_{16}$
   - A CONTROL - $D2_{16}$
   - B DATA - $D1_{16}$
   - B CONTROL - $D3_{16}$

4.

Φ = 19.6608 MHZ	
DATA RATE = 57.3 KBS	1-6, 2-4
DATA RATE = 38.7 KBS	2-6, 8-4
DATA RATE = 19.3 KBS	8-6, 9-4

FOR RATES OTHER THAN 38.7 KBS THE RC OF THE DATA SEPERATOR (SHT 6) MUST BE CHANGED

5. DISK DATA PORT = CF_{16}

ITEM	QTY.	TYPE	ZILOG PART NO.	DESCRIPTION	REF. DES.
			PARTS LIST		

UNLESS OTHERWISE SPECIFIED DIMENSIONS ARE IN INCHES
TOLERANCES
ANGLES ± 1°
FRACTIONS ± 1/64
2 PLACE DEC ± .010
3 PLACE DEC ± .005

SIGNATURE AND DATE	
DRAWN	1-18-78
DESIGN ENG	1-18-78
APVD	1-18-78

ZILOG INC.
10460 BUBB ROAD CUPERTINO, CALIFORNIA 95014

TITLE LOGIC DIAGRAM, MDC2 EU20

SIZE D DRAWING NO. D2-0050-01 REV B

SCALE SHEET OF 6

NEXT ASSY USED ON
APPLICATION

MAT'L
FINISH

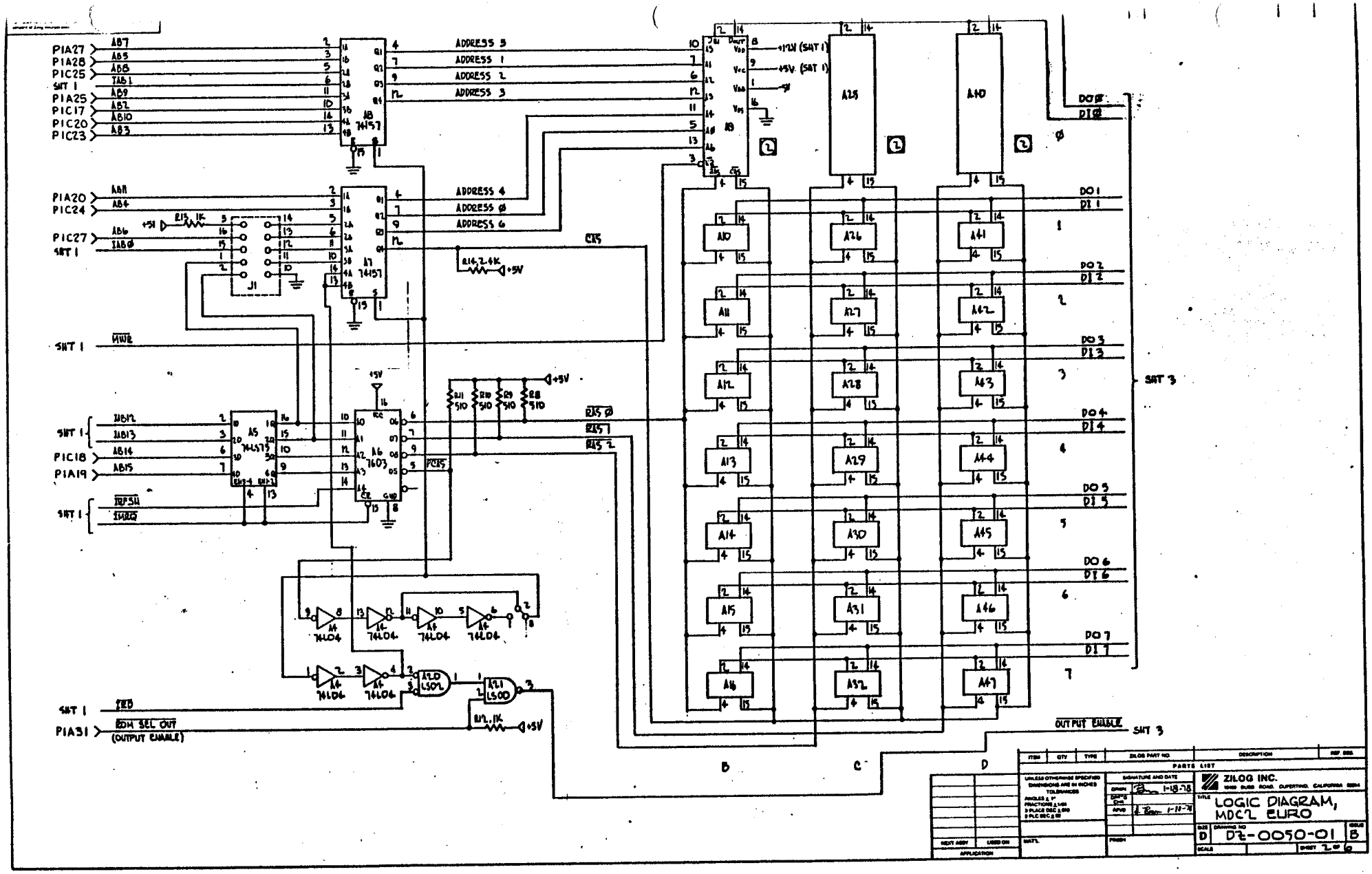
PIA27
PIA28
PIC25
SHT 1
PIA25
PIC17
PIC20
PIC23
AB7
AB5
AB8
IAB1
AB9
AB2
AB10
AB3
A8
74157
ADDRESS 5
ADDRESS 1
ADDRESS 2
ADDRESS 3
PIA20
PIC24
PIC27
SHT 1
AB11
AB4
AB6
IAB0
A7
74157
ADDRESS 4
ADDRESS 0
ADDRESS 6
J1
R13 1K
+5V
R14 2.4K
CIS
SHT 1
IWR
SHT 1
IAB12
IAB13
PIC18
PIA19
AB14
AB15
A5
74LS75
A6
7603
R11 510
R10 510
R9 510
R8 510
CIS 0
CIS 1
CIS 2
PCIS
SHT 1
IRFSH
IMREQ
A4
74LS04
A2D
LS02
A21
LS00
R12 1K
SHT 1
IRD
PIA31
RDH SEL OUT
(OUTPUT ENABLE)
+12V (SHT 1)
+5V (SHT 1)
A25
A40
A10
A11
A12
A13
A14
A15
A16
A26
A27
A28
A29
A30
A31
A32
A41
A42
A43
A44
A45
A46
A47
DO 0
DI 0
DO 1
DI 1
DO 2
DI 2
DO 3
DI 3
DO 4
DI 4
DO 5
DI 5
DO 6
DI 6
DO 7
DI 7
SHT 3
OUTPUT ENABLE
SHT 3
B
C
D
ITEM
QTY
TYPE
ZILOG PART NO.
DESCRIPTION
REF. DES.
PARTS LIST
UNLESS OTHERWISE SPECIFIED DIMENSIONS ARE IN INCHES
TOLERANCES
ANGLES ± 1°
FRACTIONS ± 1/64
2 PLACE DEC ± .010
3 PLACE DEC ± .005
SIGNATURE AND DATE
DRAWN
1-18-78
CHK'D
APVD
1-18-78
MATL
FINISH
NEXT ASSY
USED ON
APPLICATION
ZILOG INC.
10460 BUBB ROAD, CUPERTINO, CALIFORNIA 95014
TITLE
LOGIC DIAGRAM, MDC2 EURO
SIZE
D
DRAWING NO
DZ-0050-01
ISSUE
B
SCALE
SHEET 2 OF 6

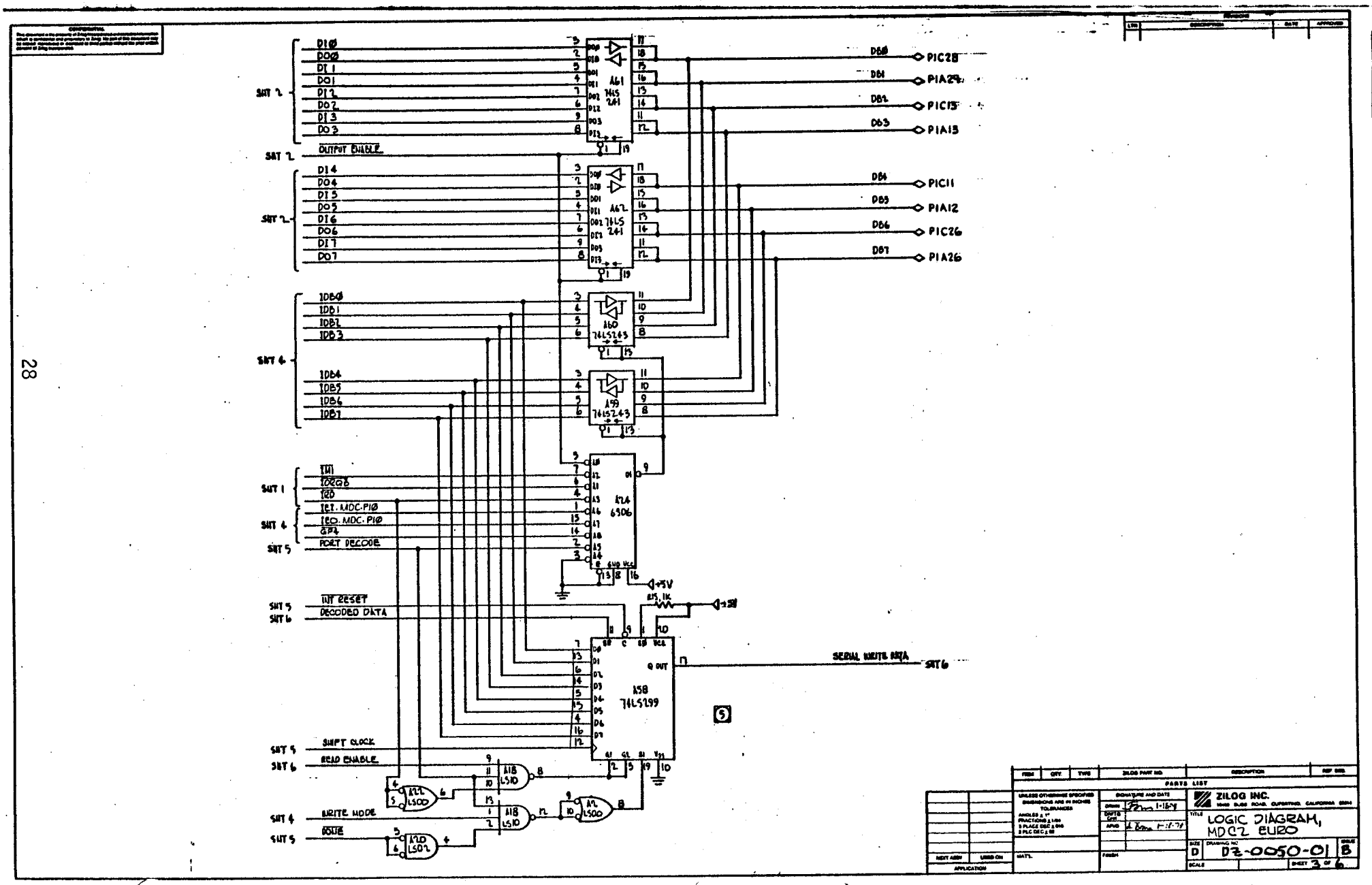
CONFIDENTIAL
REVISIONS
LTR
DESCRIPTION
DATE
APPROVED
SHT 2
DI0
DO0
DI1
DO1
DI2
DO2
DI3
DO3
OUTPUT ENABLE
A61
74LS 241
DB0
DB1
DB2
DB3
PIC28
PIA29
PIC13
PIA13
SHT 2
DI4
DO4
DI5
DO5
DI6
DO6
DI7
DO7
A62
74LS 241
DB4
DB5
DB6
DB7
PIC11
PIA12
PIC26
PIA26
SHT 4
IDB0
IDB1
IDB2
IDB3
A60
74LS243
IDB4
IDB5
IDB6
IDB7
A59
74LS243
SHT 1
IM1
IORQB
IRD
SHT 4
IEI. MDC. PI0
IEO. MDC. PI0
GP4
SHT 5
PORT DECODE
A24
6306
+5V
SHT 5
INT RESET
SHT 6
DECODED DATA
R15, 1K
+5V
A58
74LS299
Q OUT
SERIAL WRITE DATA
SHT 6
SHT 5
SHIFT CLOCK
SHT 6
READ ENABLE
A18
LS10
A22
LS00
SHT 4
WRITE MODE
SHT 5
RDUE
A20
LS02
5
PARTS LIST
FROM
QTY.
TYPE
ZILOG PART NO.
DESCRIPTION
REF DES
UNLESS OTHERWISE SPECIFIED
DIMENSIONS ARE IN INCHES
TOLERANCES
ANGLES ± 1°
FRACTIONS ± 1/64
2 PLACE DEC. ± .010
3 PLACE DEC. ± .005
DRAWN
DATE
APVD
ZILOG INC.
10460 BUBB ROAD, CUPERTINO, CALIFORNIA 95014
TITLE
LOGIC DIAGRAM,
MDC2 EURO
SIZE
D
DRAWING NO.
DZ-0050-01
ISSUE
B
SCALE
SHEET 3 OF 6
NEXT ASSY
USED ON
APPLICATION
MATL.
FINISH

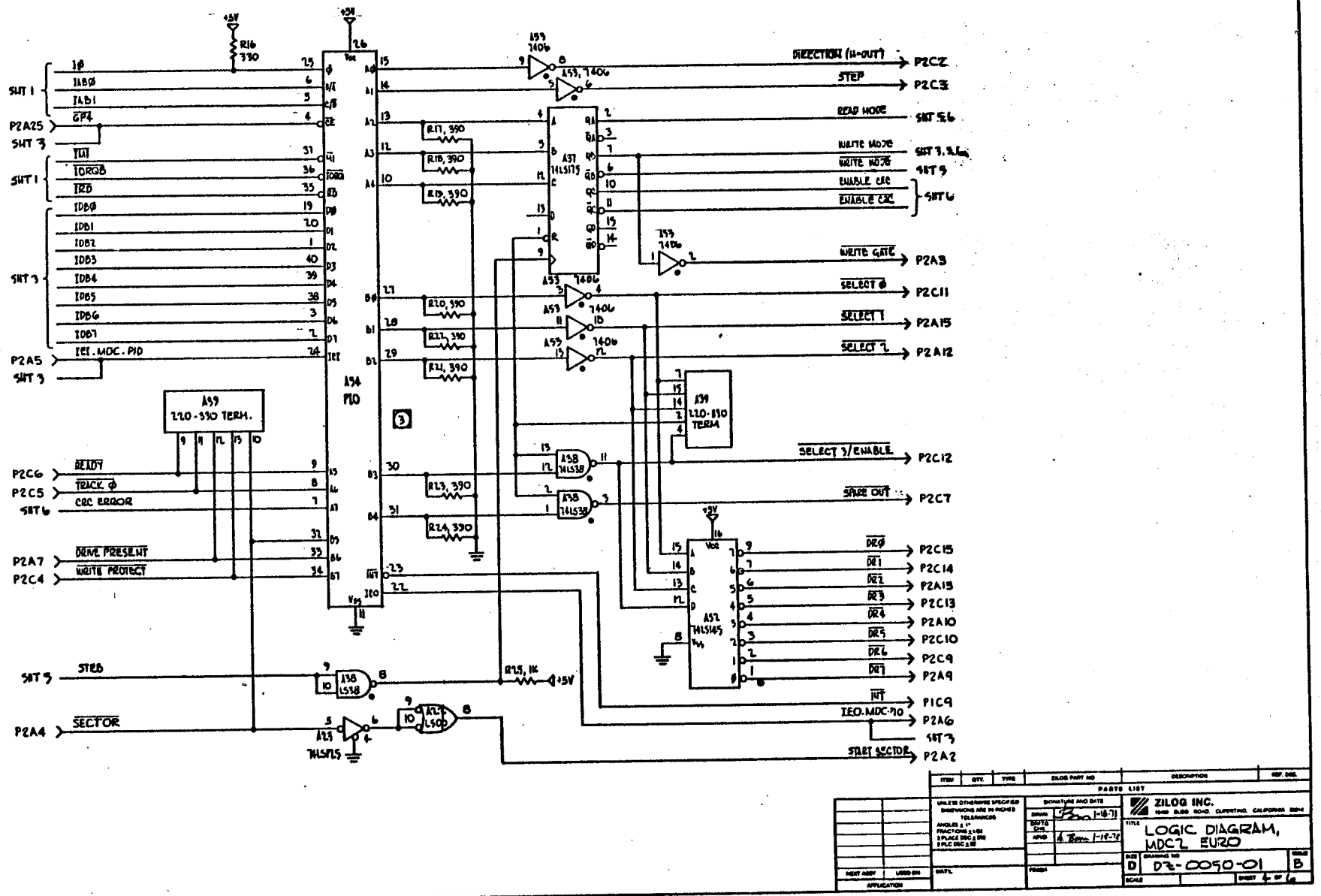
LOGIC DIAGRAM, MDC2 EURO
ZILOG INC.
D2-0090-01
B
DIRECTION (H-OUT)
STEP
READ MODE
WRITE MODE
ENABLE CRC
WRITE GATE
SELECT 0
SELECT 1
SELECT 2
SELECT 3/ENABLE
SPARE OUT
INT
IEO-MDC-PIO
START SECTOR
READY
TRACK 0
CRC ERROR
DRIVE PRESENT
WRITE PROTECT
STEB
SECTOR
A54 PIO
A37 74LS175
A52 74LS145
A39 220-330 TERM.
A39 220-330 TERM
A38 74LS138
A29 74LS175
A22 LS00
R16 330
R17, 390
R18, 390
R19, 390
R20, 390
R21, 390
R22, 390
R23, 390
R24, 390
R25, 1K
+5V
PARTS LIST
ITEM
QTY.
TYPE
ZILOG PART NO
DESCRIPTION
REF. DES.
UNLESS OTHERWISE SPECIFIED DIMENSIONS ARE IN INCHES
TOLERANCES
ANGLES ± 1°
FRACTIONS ± 1/64
3 PLACE DEC ± .010
2 PLACE DEC ± .030
NEXT ASSY
USED ON
APPLICATION
SIGNATURE AND DATE
DRAWN
CHK'D
APVD
FINISH
SIZE
DRAWING NO
SCALE
SHEET 4 OF 6

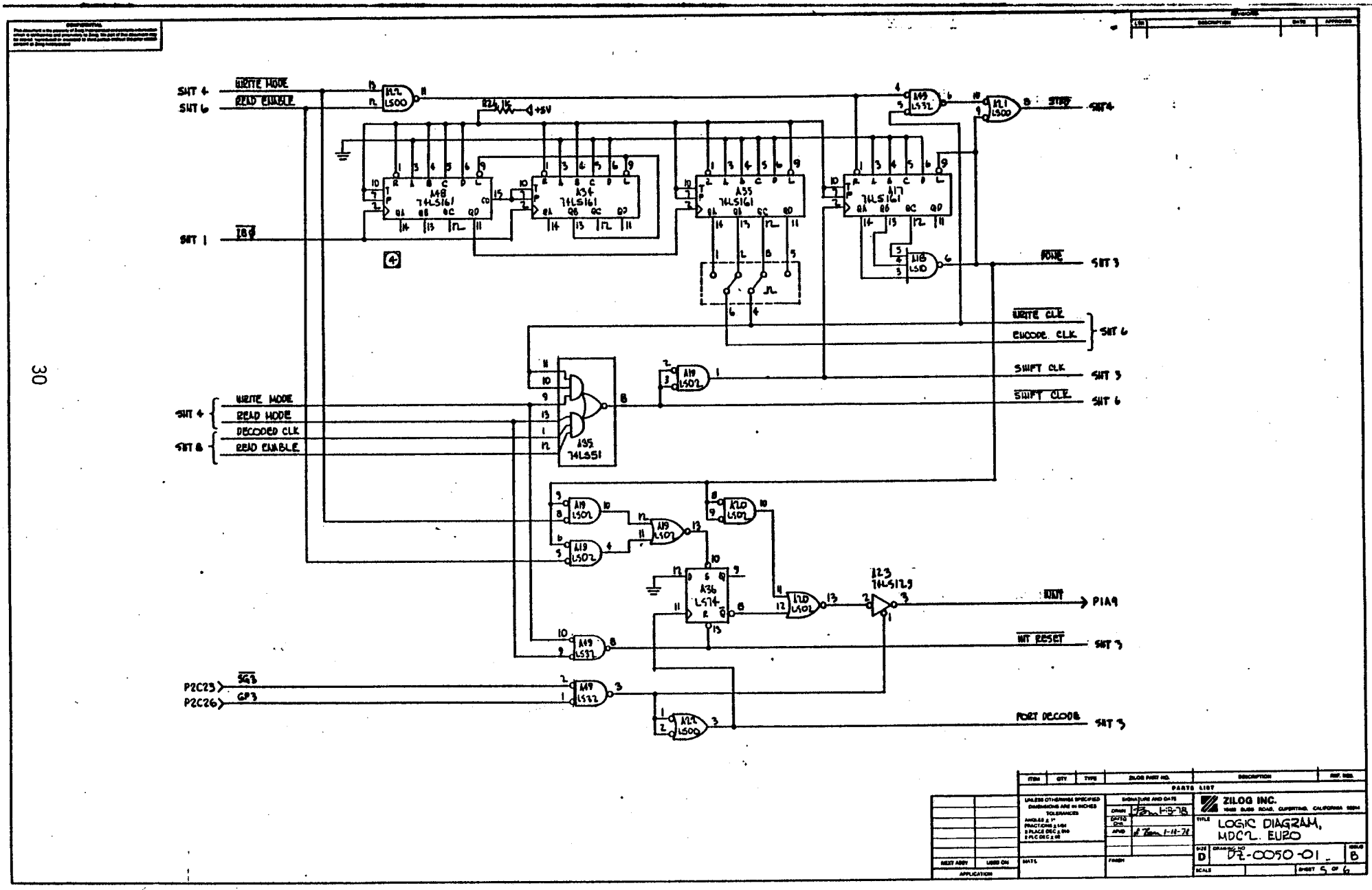
SHT 4
WRITE MODE
SHT 6
READ ENABLE
SHT 1
IBF
A48 74LS161
A34 74LS161
A35 74LS161
A17 74LS161
A32 LS00
A49 LS32
A1 LS00
STRB
SHT 4
+5V
ROME
SHT 3
WRITE CLK
ENCODE CLK
SHT 6
SHIFT CLK
SHT 3
SHIFT CLK
SHT 6
WRITE MODE
READ MODE
DECODED CLK
READ ENABLE
SHT 4
SHT 6
A35 74LS51
A19 LS02
A20 LS02
A36 LS74
123 74LS125
INT
PIA9
INT RESET
SHT 3
P2C25
P2C26
GP3
PORT DECODE
SHT 3
PARTS LIST
ZILOG INC.
LOGIC DIAGRAM, MDCZ. EUROPE
DZ-0050-01
SHEET 5 OF 6

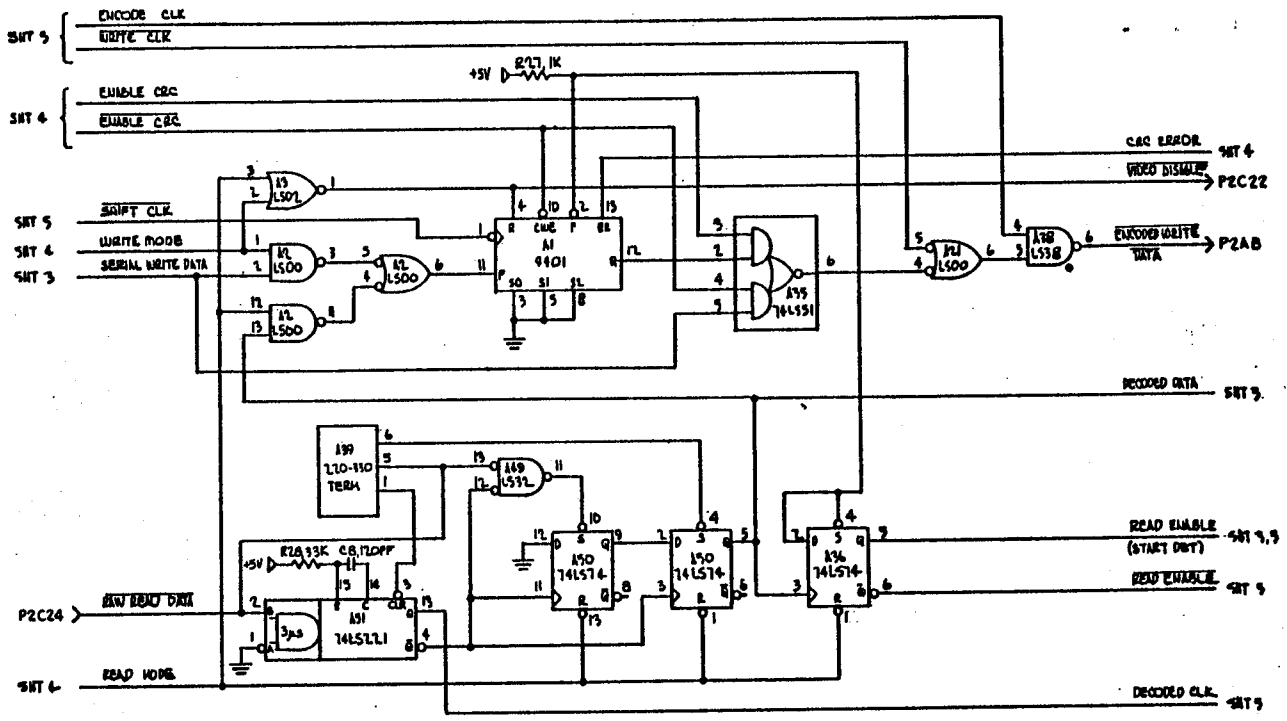

ITEM	QTY	TYPE	ZILOG PART NO	DESCRIPTION	REF DES
			PARTS LIST		

UNLESS OTHERWISE SPECIFIED DIMENSIONS ARE IN INCHES TOLERANCES ANGLES ± 1° FRACTIONS ± 1/64 2 PLACE DEC ± .010 3 PLC DEC ± .005

SIGNATURE AND DATE: DRWN 1-18-78; CHKD; APVD 1-18-78

ZILOG INC. 10460 BUBB ROAD CUPERTINO, CALIFORNIA 95014

TITLE: LOGIC DIAGRAM, MDC2 EURO

SIZE D | DRAWING NO DZ-0050-01 | REV D

SCALE | SHEET 6 OF 10

NEXT ASSY | USED ON | APPLICATION

MATL | FINISH

MDC PIN #	SIGNAL NAME	FUNCTION
1	+5V	VCC SUPPLY
2	+5V	
3	+5V	
4	IORQ-	
5	DB5	
6	.	
7	DR7-.(RADIAL SELECT 7-)	
8	DB3	
9	STEP-	
10	SELECT.3-.(BINARY SELECT :	ENABLE-)
11	WRITE.GATE-	
12	DB6	
13	DB0	
14	DR6-.(RADIAL SELECT 6-)	
15	DR5-.(RADIAL SELECT 5-)	
16	.	
17	DISK.(C/T.0)	COMPOSITE SECTOR AND INDEX MARKS
18	DR0-.(RADIAL SELECT 0-)	SYSTEM DISK RADIAL SELECT LINE
19	SECTOR	SIGNAL TO MCB CTC FOR SECTOR TIMING
20	.	
21	.	
22	.	
23	WR-	
24	.	
25	.	
26	AB7	
27	AB8	
28	.	
29	AB5	
30	AB6	
31	.	
32	AB15	
33	READY-	INDICATES INDEX MARKS & DOOR SHUT
34	DRIVE.PRESENT-	GND LINE ON DISK PULLS THIS LOW
35	RFSH-	
36	AB13	
37	AB11	
38	.	
39	.	
40	.	
41	.	
42	.	
43	.	
44	.	
45	.	
46	.	

MDC/E PIN #	SIGNAL NAME	FUNCTION
P1A1	+5V	VCC SUPPLY
P1A1	+5V	
P1A1	+5V	
P1C4	IORQ-	
P1A12	DB5	
P2A9	DR7-.(RADIAL SELECT 7-)	
P1A13	DB3	
P2C3	STEP-	
P2C12	SELECT.3-.(BINARY SELECT :	ENABLE-)
P2A3	WRITE.GATE-	
P1C26	DB6	
P1C28	DB0	
P2C9	DR6-.(RADIAL SELECT 6-)	
P2C10	DR5-.(RADIAL SELECT 5-)	
P2A2	DISK.(C/T.0)	COMPOSITE SECTOR AND INDEX MARKS
P2C15	DR0-.(RADIAL SELECT 0-)	SYSTEM DISK RADIAL SELECT LINE
P2A4	SECTOR	SIGNAL TO MCB CTC FOR SECTOR TIMING
P1A4	WR-	
P1A27	AB7	
P1C25	AB8	
P1A28	AB5	
P1C27	AB6	
P1A19	AB15	
P2C6	READY-	INDICATES INDEX MARKS & DOOR SHUT
P2A7	DRIVE.PRESENT-	GND LINE ON DISK PULLS THIS LOW
P1A22	RFSH-	
P1C19	AB13	
P1A20	AB11	
P1C1	+5V	VCC SUPPLY
P1C1	+5V	
P1C1	+5V	
P1A32	GND	
P1A32	GND	
P1C32	GND	
P2C24	RAW.READ.DATA-	UNPROCESSED DATA FROM DISK
P2C5	TRACK.0-	INDICATES HEAD AT OUTERMOST TRACK
P1C11	DB4	
P2C7	SPARE.OUT-	UNUSED PIO OUTPUT
P2C2	DIRECTION-	HIGH=OUT
P1C13	DB2	
P2C22	VIDEO.DISABLE-	DISALES VIDEO DURING DISK ACCESS
P1A26	DB7	
P2C13	DR3-.(RADIAL SELECT 3-)	
P1A29	DB1	
P2A13	DR2-.(RADIAL SELECT 2-)	USER DISK RADIAL SELECT LINE
P2A8	ENCODED.WRITE.DATA-	FM ENCODED DATA TO DISK

P2C14	DR1-.(RADIAL SELECT 1-)	
P1C9	INT-	OPEN DRAIN SYSTEM INTERRUPT LINE
P2A5	SELECT.1-.(BINARY SELECT 1-)	
P2A10	DR4-.(RADIAL SELECT 4-)	
P2C11	SELECT.0-.(BINARY SELECT 0-)	
P1A18	MRQ-	
P2A12	SELECT.2-.(BINARY SELECT 2-)	
P1A25	AB9	
P1C20	AB10	
P1A30	8.PHI-	8X SYSTEM CLOCK FOR DISK TIMING
P1C18	AB14	
P2C23	SG3-	SUBGROUP 3 FOR DISK SYNCHRONIZATION
P2C4	WRITE.PROTECT-	INDICATES WRITE PROTECT TAB IS MISSING
P1C16	AB12	
P1C24	AB4	
P1C10	PHI-	SYSTEM CLOCK
P1C23	AB3	
P1C17	AB2	
P1C14	AB1	
P1A17	AB0	
P2C26	GP3-	GROUP 3 FOR DISK SYNCHRONIZATION
P2A25	GP4-	MDC PIO GROUP DECODE
P2A6	IEO.MDC.PIO	DAISY CHAIN OUTPUT FROM MDC PIO
P2A5	IEI.MDC.PIO	DAISY CHAIN INPUT TO MDC PIO
P1C15	M1-	
P1A5	RD-	
P1A9	WAIT-	
P2A1	GND	
P2A1	GND	
P2C1	GND	